OPERATIONAL & MAINTENANCE MANUAL

On Site
Help Desk
#WEIRHERE
CONTACT NOW 24/7
780.462.1910
info@weirconcepts.com

WEIR CONCEPTS INC.

WC-RACK AND PINION PNEUMATIC ACTUATOR

www.weirconcepts.com
SCAN ME

Version 4.0

7596 Wagner RD NW Edmonton , Alberta CANADA T6E 5B2
780.462.1910 ph 780.462.1959 fax info@weirconcepts.com www.weirconcepts.com

Weir Concepts Inc.

MADE IN ALBERTA, CANADA PRODUCTS

Manufactured and assembled at our Edmonton based facility

DETAILS ARE THE DIFFERENCE BETWEEN ORDINARY AND EXCELLENCE

1. Summary

The instruction manual for all models of WC series rack and pinion pneumatic actuators.

2. Technical & Application Data

Operating Temperature: -45°C to +80°C

Pneumatic Input Pressure Range: 30-140 psig

Output Torque Range: 27-75,000 in-lb

Operating Media: Dry and clean compressed air

3. Handling and Lifting

NOTE: Only trained and experienced personnel should handle/lift the actuator

3.1 Lifting Recommendations

3.1.1 Use industry standard practices as it pertains to suitability rated lifting devices, slings and chains that are safe for use.

3.1.2 Do not lift the actuator and valve combination using the actuator lifting lugs only

3.2 Lifting Instructions

3.2.1 Prior to lifting the actuator remove electrical power and pneumatic lines to ensure that the actuator is fully depressurized and powered down.

3.2.2 Use only main lifting lugs

3.2.3 Actuator must remain horizontal with the load balanced

4. Installation on the Valve

4.1 Actuator can be installed on valve directly using the actuator housing flange or more commonly using a mounting bracket and coupling with applicable fasteners.

4.2 Actuator is supplied in the fail position (for single-acting). Install the valve in the correct position per the actuator fail position. Check the position of the actuator using position indicator on actuator body or limit switch (if applicable).

CALL US TODAY 24 hours a day, 7 days a week

4.3 Ensure the mounting faces and all connection surfaces on the valve and actuator are clean and free of any debris.

4.4 Grease the coupling stem, bore and valve stem to facilitate assembly.

4.5 Lift the actuator according to handling and lifting instruction (Section 3)

4.6 Whenever possible, install with valve stem in a vertical position.

4.7 Do not exert additional force while installing the coupling or actuator onto the valve.

5. Removal from Valve

5.1 Eliminate electrical power supply and pneumatic supply

5.2 Release all pressure from controls and remove supply piping/wiring

5.3 Prepare actuator for lifting following guidelines in Section 3

5.4 Remove all mounting fasteners

5.5 Lift and remove actuator from valve

6. Tube & Fitting Installation

6.1 Tubing & Fitting installation shall be performed by trained personnel using industry best practices.

<u>Air inlet size table:</u>

Actuator size	WC-45	WC-52	WC-63	WC-75	WC-83	WC-92	WC-105
Air inlet size	1/8” NPT	1/8” NPT	1/8” NPT	1/8” NPT	1/8” NPT	1/8” NPT	1/8” NPT
Actuator size	WC-125	WC-140	WC-160	WC-190	WC-210	WC-240	WC-270
Air inlet size	1/4” NPT	1/4” NPT	1/4” NPT	1/4” NPT	1/4” NPT	1/4” NPT	1/2” NPT
Actuator size	WC-300	WC-350	WC-400				
Air inlet size	1/2” NPT	1/2” NPT	1/2” NPT				

CALL US TODAY **24 hours a day, 7 days a week**

Overall Dimenions and Accessory mounting Dimensions

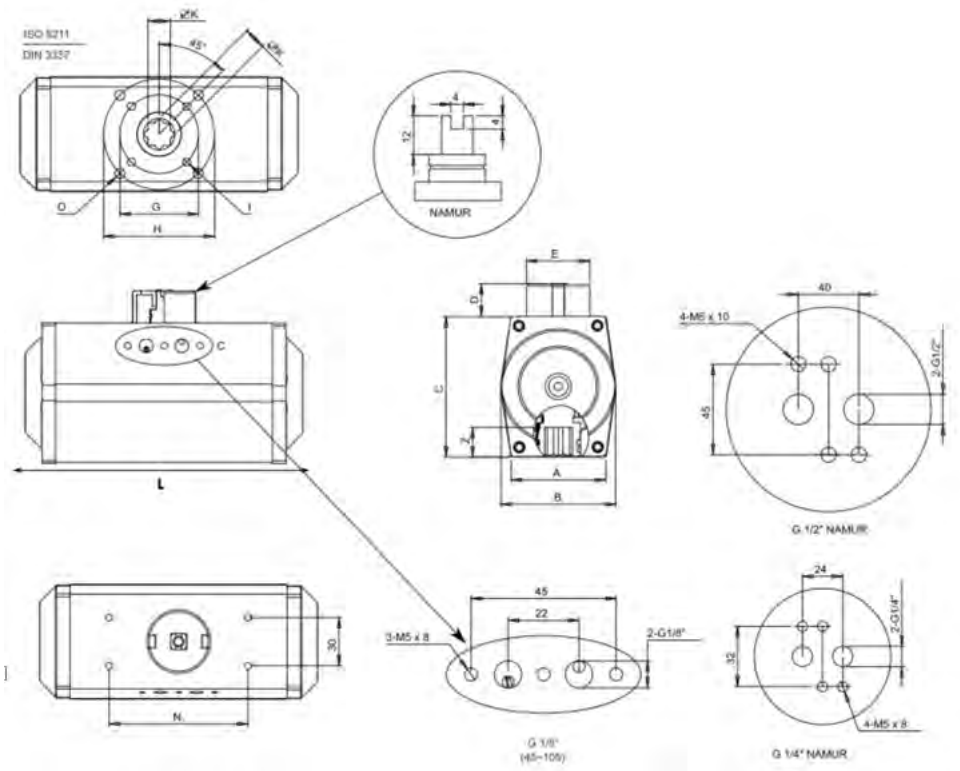

Model	A	B	C	D	E	L	G	H	I	M	N	K	Z
045DA/SR	48	58	65	20	10	150	F03	F05	M5X8	M6X10	80	11	14
0520A/SR	50	59	74	20	10	150	F03	F05	M5X8	M6X10	80	11	14
063DA/SR	60	72	88	20	10	173	F05	F05	M6X10	M8X13	80	14	18
075DA/SR	65	83	100	20	10	187	F05	F07	M6X10	M8X13	80	14	18
083DA/SR	67	91	110	20	10	214	F05	F07	M6X10	M8X13	80	17	21
092DA/SR	76	104	120	20	14	265	F05	F07	M6X10	M8X13	80	17	21
105DA/SR	84	114	133	20	14	276	F07	F10	M8X13	M10X16	80	22	26
125DA/SR	103	137	160	30	22	306	F07	F10	M8X13	M10X16	130	22	26
140DA/SR	107	150	170	30	22	400	F10	F12	M10X16	M12X20	130	27	31
160DA/SR	110	173	197	30	22	465	F10	F12	M10X16	M12X20	130	27	31
190DA/SR	115	206	226	30	32	530		RF14		M16X25	130	36	40
210DA/SR	135	226	260	30	32	535		F14		M16X25	130	36	40
240DA/SR	155	256	290	30	32	602		F16		M20X25	130	46	50
270DA/SR	190	294	320	30	32	715		F16		M20X25	130	46	50
300DA/SR	196	324	348	30	32	745		F16		M20X25	130	46	60
350DA/SR	220	380	402	30	32	880		F16	M20X25	M20X25	130	46	60
400DA/SR	298	514	484	30	32	930	F16	F25	M20X25	M16X25	130	55	60

CALL US TODAY **24 hours a day, 7 days a week**

7. Operation

7.1 Auto-Operation

On/Off Control Pneumatic Actuated Valve:

A) Valve opens when solenoid valve is energized (Fail Close Type)
B) Valve closes when solenoid valve is de-energized (Fail Close Type)
C) Valve closes when solenoid valve is energized (Fail Open Type)
D) Valve opens when solenoid valve is de-energized (Fail Open Type)

Modulating Control Pneumatic Actuated Valve:

4-20mADC signal to Electro-Pneumatic positioner (or 0.02~0.1Mpa to Pneumatic – Pneumatic positioner) the valve position is proportionally controlled by the input signal

8. Stroke Adjustment

The stroke adjustment is available from 85° to 95° of travel by adjusting the open and close position bolts as per below referencing the Assembly Drawing and Parts List:

Loosen Stop Nut
Adjust Screw as needed:
- Loosen = Increase travel
- Tighten = Decrease Travel

Tighten Stop Nut on the Adjust Screw to set the position

CALL US TODAY **24 hours a day, 7 days a week**

Assembly Drawing &
Parts List

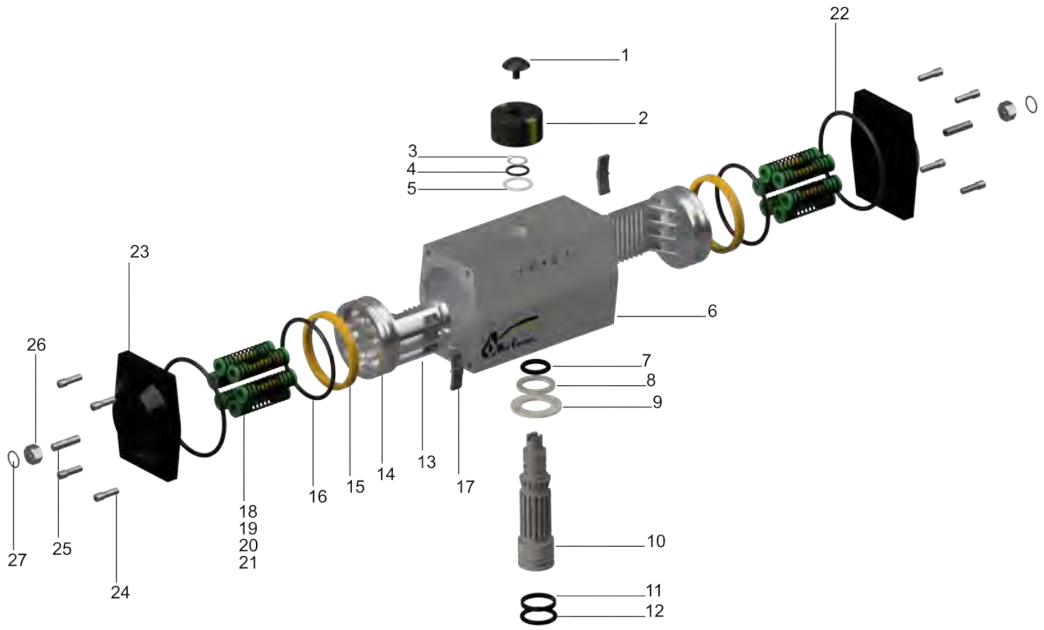

No	Description	QTY	Standard Materials
1	Indicator Screw	1	Stainless Steel
2	Indicator Screw	1	Plastic
3	Snap Ring	1	Stainless Steel
4	Washer	1	Stainless Steel
5	Outside Washer	1	Engineering Plastics
6	Body	1	Aluminum Alloy
7	O-Ring (Top)	1	Viton / NBR
8	Bearing Wear Band	1	Engineering Plastics
9	Inside Washer	1	Engineering Plastics
10	Pinion	1	Alloy Steel
11	Wear Band Bottom	1	Engineering Plastics
12	O-Ring (Bottom)	1	Viton / NBR
13	Plug	2	NBR
14	Piston	2	Die-casting Aluminum/Steel
15	Piston Wear Band	2	Engineering Plastics
16	Piston O-Ring	2	Viton / NBR
17	Guide Piston	2	Nylon 66
18	Spring	-	Spring Steel
19	Spring Retainer (L)	-	Nylon 66
20	Spring Retainer (R)	-	Nylon 66
21	Retainer Connector	-	Brass
22	End-Cap O-Ring	2	Viton / NBR
23	End-Cap	2	Die-casting Aluminum
24	End-Cap Stop Screw	8	Stainless Steel
25	Adjust Screw	2	Stainless Steel
26	Adjust Screw Nut	2	Stainless Steel
27	Adjust Screw O-Ring	2	Viton / NBR

CALL US TODAY **24 hours a day, 7 days a week**

9. Overhaul (including Seal Replacement)

NOTE: To perform disassembly of the actuator, it is preferred for it be fully removed from the valve. Work should only be performed by experienced personnel.

9.1 Disassembly

9.1.1 Ensure actuator is fully de-energized of power and air supply and all controls removed with actuator returned to fail position.

9.1.2 Fully back off all spring stop screws. Unscrew and remove cover bolts from end caps (Figure F).

9.1.3 Remove the pistons by rotating the drive shaft counterclockwise using an open ended wrench (Figure G). When pistons are disengaged from drive shaft, the NEMUR slot should be at an approx. 45 degree angle.

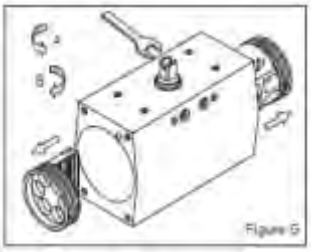

9.1.4 Remove spring clip, carefully remove drive shaft through bottom of actuator (Figure H) to avoid any damage to sealing or contact faces. Using a marker, draw a line to indicate proper re-alignment and timing for the pistons.

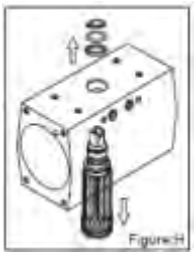

9.1.5 Inspect and clean all parts. Contact Weir Concepts for any replacement parts required. Replace any necessary o-rings and seals using only Weir Concepts factory seal kits.

CALL US TODAY **24 hours a day, 7 days a week**

9.2 Assembly

9.2.1 Prepare parts for assembly by ensuring that any contact surfaces are sufficiently greased.

9.2.2 Insert drive shaft into cylinder and install snap ring and washer.

9.2.3 Ensure piston are in the correct position and turn drive shaft 45 degrees for proper alignment as detailed in Figure I.

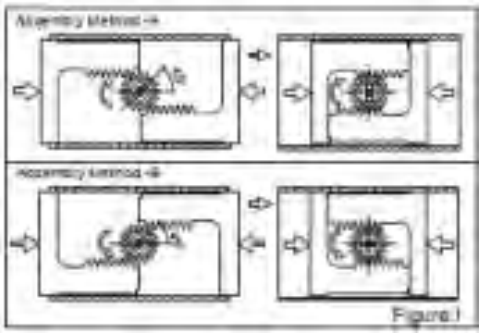

9.2.4 Install springs (for spring return actuator) and install cover, bolts and tighten.

9.2.5 Connect air supply to ensure actuator has no leaks and cycles properly.

10. Troubleshooting

Issue	Possible Cause(s)	Corrective Action
Actuator not functioning	Insufficient supply pressure	Ensure supply pressure is sufficient as per catalog to cycle actuator.
	Loss of control power	Ensure power is live at source and at solenoid/ positioner.
	Mechanical function of valve or actuator	If both supply pressure and control power are sufficient consult valve manufacturer and Weir Concepts service to perform further troubleshooting.
Valve not fully stroking	Stops incorrectly set	Re-adjust stops as outlined in Section 8
	Lack of supply pressure	Ensure supply pressure is sufficient as per catalog to cycle actuator.
	Valve blocked or unable to fully stoke	Consult valve manufacturer
Valve Leakage	Stops incorrectly set	Re-adjust stops as outlined in Section 8
	Valve seat or seal issues	Consult valve manufacturer
Actuator Leakage	Worn Seals	Contact Weir Concepts
	Loose or improper connections	Ensure all supply fitting connections are sufficiently tight and correctly sealed
Actuator Cycle Time too fast/slow	Incorrect supply pressure	Ensure supply pressure is correct for application as per catalog info.
	Controls adjustment required	Ensure any regulators, speed controls, etc. are adjusted correctly to achieve desired open/closing times.

CALL US TODAY 24 hours a day, 7 days a week

OPERATIONAL & MAINTENANCE MANUAL

WC-RACK AND PINION PNEUMATIC ACTUATOR

Technical Library

www.weirconcepts.com

SCAN ME

SOLUTIONS FOR YOUR COMPANY NEEDS

SUBSCRIBE

On Site Help Desk

#WEIRHERE

CONTACT NOW 24/7

toll free 1.866.462.1910

info@weirconcepts.com

www.weirconcepts.com

HEAD OFFICE:

7596 Wagner RD NW
Edmonton, Alberta CANADA T6E 5B2
info@weirconcepts.com
1.866.462.1910 Toll Free
780.462.1910 ph | 780.462.1959 fax

HELP DESK EXPERTISE

FOR YOUR SUPPORT AND SERVICE

24 hours a day, 7 days a week

NO CHARGE ON CALLS SERVICE

We offer technical assistance, product knowledge, and reliable trouble shooting

Brochures/Maintenance info available online VIA our Technical Library

Weir Concepts Inc.