WEIR CONCEPTS INC.

PRODUCT GUIDE

- WC-RACK AND PINION ACTUATOR -

SCAN ME

www.weirconcepts.com

EXPECT QUALITY AND RELIABILITY

using our brand name RACK AND PINION ACTUATOR

Version 4.0

Head Office:

7596 Wagner RD NW
Edmonton , Alberta CANADA T6E 5B2
info@weirconcepts.com

Weir Concepts Inc.

20 2003-2023

MADE IN ALBERTA, CANADA PRODUCTS
Manufactured and assembled at our Edmonton based facility

world wide shipping

Toll Free 1.866.462.1910
780.462.1910 ph | 780.462.1959 fax

DETAILS ARE THE DIFFERENCE BETWEEN ORDINARY AND EXCELLENCE

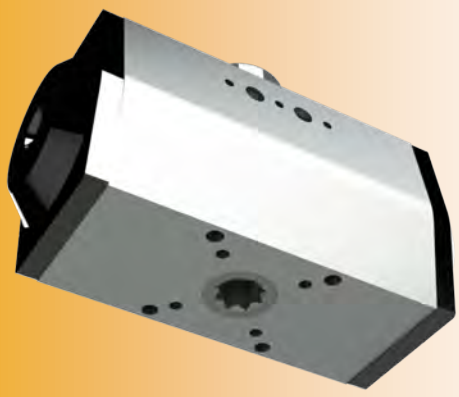

RACK AND PINION ACTUATORS

Weir Concepts WC-R Range rack and pinion actuator satisfies a wide range of industrial and process applications.

They feature a durable, compact twin rack design and come pre-lubricated for the life of the assembly at least one million cycles under normal working conditions.

Weir Concepts At Work For You

- Wide range of economical sizing and selections.
- The materials used in construction and assembly provide superior corrosion protection.
- Temperature range –45 to 80°C.
- SAFE and VERSATILE - spring return units can be assembled to provide spring return operation in either clockwise or counter-clockwise directions.
- Long end cap screws retain the cap until the spring is relaxed, providing safe disassembly.
- Every WC Fluid System actuator is built to provide long and efficient service with minimum maintenance.
- The design, engineering and materials used in the construction ensure optimum performance even in the harshest environments.
- Each unit is fully tested upon manufacture.
- Max air supply: 140PSI
- Extruded aluminium body for internal and external corrosion protection. Honed cylinder surface for longer life and low coefficient of friction.
- **WEIR CONCEPTS OFFERS TECHNICAL CONSULTING AND PROVIDES A TOTAL END TO END SOLUTION.**
- Dual piston rack and pinion design for compact construction, symmetric mounting position, high-cycle life and fast operation. Reverse rotation can be accomplished in the field by simply inverting the pistons.
- Multiple bearings and guides on racks and pistons, low friction, high cycle life.
- Modular preloaded spring cartridge design, with coated spring for versatile range, greater safety corrosion resistance, and longer cycle life.
- Fully machined teeth on piston and pinion for accurate low backlash rack and pinion engagement for maximum efficiency. Stainless steel fasteners for long term corrosion resistance.
- Full conformance to the latest specifications: ISO5211, DIN 3337 and NAMUR for industry standard mounting of solenoids, limit switches and other accessories.

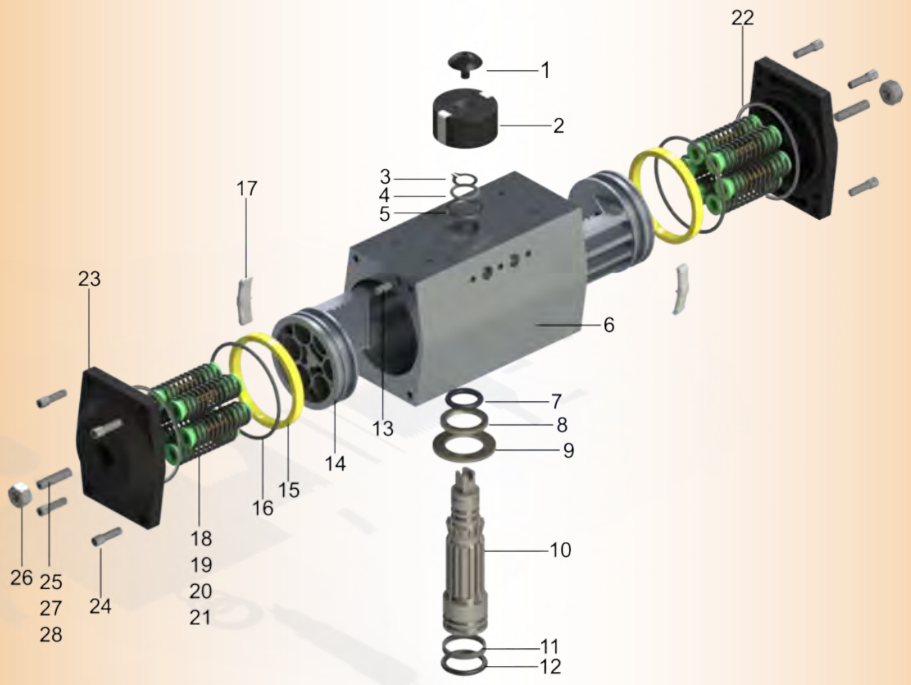

No.	Description	QTY	Standard Materials
1	Indicator Screw	1	Stainless Steel
2	Indicator Screw	1	Plastic
3	Snap Ring	1	Stainless Steel
4	Washer	1	Stainless Steel
5	Outside Washer	1	Engineering Plastics
6	Body	1	Aluminum Alloy
7	O-Ring (Top)	1	Viton / NBR
8	Bearing Wear Band	1	Engineering Plastics
9	Inside Washer	1	Engineering Plastics
10	Pinion	1	Alloy Steel
11	Wear Band Bottom	1	Engineering Plastics
12	O-Ring (Bottom)	1	Viton / NBR
13	Plug	2	NBR
14	Piston	2	Die-casting Aluminum/Steel
15	Piston O-Ring	2	Viton / NBR
16	Piston Wear Band	2	Die-casting Aluminum/Steel
17	Guide Piston	2	Nylon 66
18	Spring	-	Spring Steel
19	Spring Retainer (L)	-	Nylon 66
20	Spring Retainer (R)	-	Nylon 66
21	Retainer Connector	-	Brass
22	End-Cap O-Ring	2	Viton / NBR
23	End-Cap	2	Die-casting Aluminum
24	End-Cap Stop Screw	8	Stainless Steel
25	Adjust Screw	2	Stainless Steel
26	Adjust Screw Nut	2	Stainless Steel
27	Adjust Screw Washer	2	Stainless Steel
28	Adjust Screw O-Ring	2	Viton / NBR

PARTS AND MATERIAL TABLE

OPERATING PRINCIPLE AND STANDARD ROTATION

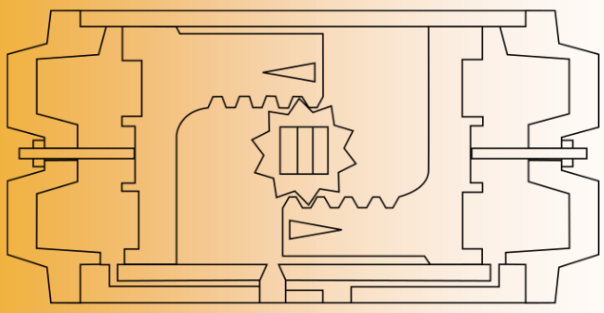

A B
CCW

CCW - Air to Port pushes pistons out, turning the pinion counterclockwise as air is expelled from Port B.

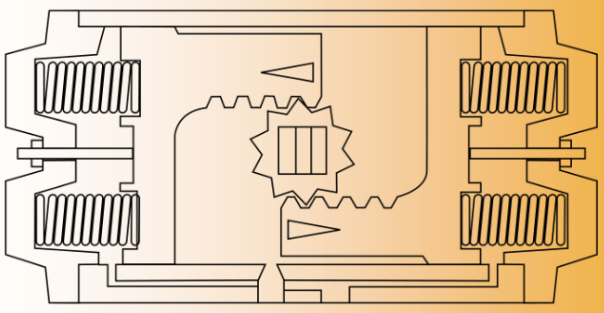

A B
CW

CCW - Air to Port A pushes pistons out, compressing springs. The pinion turns counterclockwise as air is expelled from Port B.

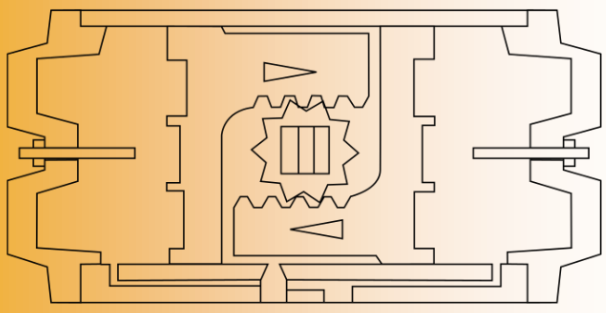

A B
CW

DA - Air to Port B pulls pistons inward, turning the pinion clockwise as air is expelled from Port A.

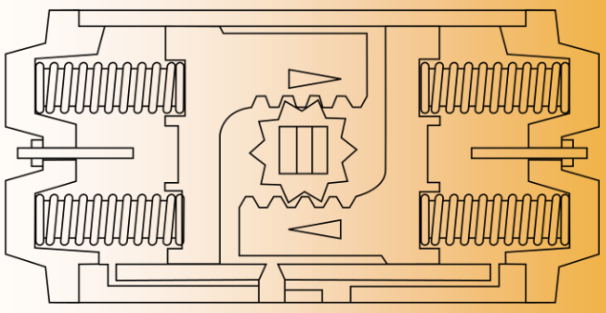

A B
CCW

CW - With loss of air pressure, stored energy in the springs drives pistons inward, turning the pinion clockwise as air is released from Port A.

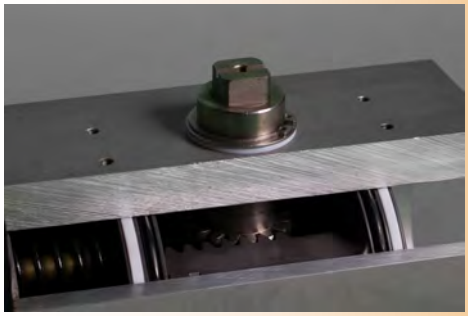

OUTPUT TORQUE OF DOUBLE ACTING ACTUATORS

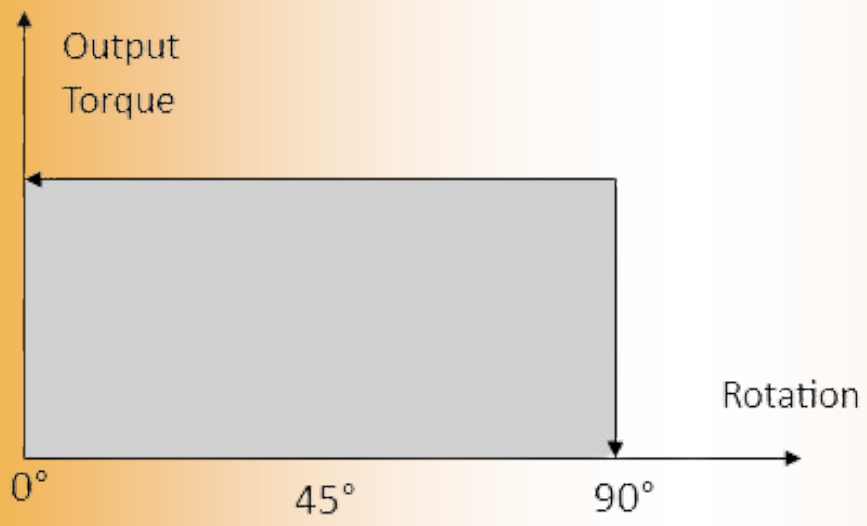

Output Torque of WC Series Pneumatic Actuator w/ Double Acting (Unit: lbs.)										
	Air Pressure (PSI)									
(Model)	30	35	40	50	60	70	80	90	100	117
WC-32D	27.9	34.2	41.4	54.9	62.1	68.4	75.6	82.8	96.3	109.8
WC-45D	54	68.4	81.9	108.9	122.4	135.9	149.4	162.9	189.9	217.8
WC-52D	72.9	90.9	108.9	144.9	162.9	181.8	199.8	217.8	253.8	290.7
WC-63D	127.8	160.2	191.7	255.6	288	310.5	351.9	293.4	447.3	511.2
WC-75D	180.9	226.8	271.8	362.7	407.7	452.7	498.6	543.6	634.5	724.5
WC-83D	277.2	346.5	415.8	554.4	624.6	693.9	763.2	832.5	971.1	1109.7
WC-92D	408.6	511.2	613.8	818.1	920.7	1022.4	1125	1226.7	1431.9	1636.2
WC-105D	592.2	739.8	888.3	1184.4	1332	1479.6	1628.1	1775.7	2071.8	2367.9
WC-125D	927	1152	1386	1845	2079	2304	2538	2772	3231	3690
WC-140D	1575	1971	2367	3159	3555	3951	4338	4734	5526	6318
WC-160D	2403	3006	3609	4815	5409	6012	6615	7218	8415	9621
WC-190D	3879	4842	5814	7749	8721	9693	10665	11628	13572	15507
WC-210D	4734	5922	7101	9468	10656	11844	13023	14211	16578	18954
WC-240D	6957	8694	10440	13914	15660	17397	19134	20880	24354	27837
WC-270D	10566	13212	15849	21141	23778	26424	29061	31707	36990	42273
WC-300D	13734	17172	20601	27468	30609	34335	37773	41202	48069	54936
WC-350D	20565	25704	30843	41130	46269	51408	56547	61686	71973	82251
WC-400D	29304	36621	43947	58599	65925	73251	80577	87903	102546	117198

OUTPUT TORQUE OF SPRING RETURN ACTUATORS

30 psi	40 psi
60 psi	70 psi
80 psi	

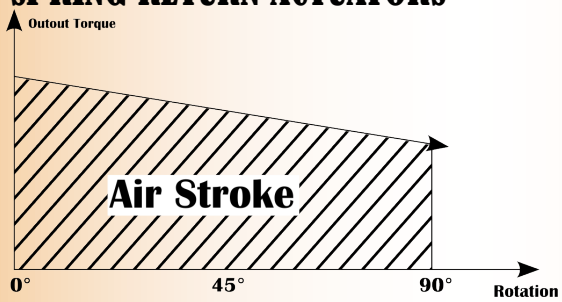

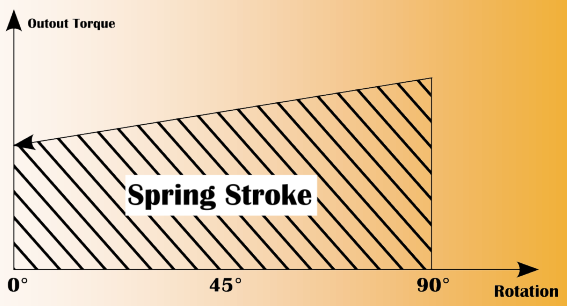

OUTPUT TORQUE OF WC SERIES PNEUMATIC ACTUATOR WITH SPRING RETURN (UNIT:" LBS.)

Model	Spring QTY.	Air Pressure (PSI) 30		35		40		60		70		80		100		117		Springs Output	
		0° Start	90° End	0° Start	90° End	0° Start	90° End	0° Start	90° End	0° Start	90° End	0° Start	90° End	0° Start	90° End	0° Start	90° End	0° Start	90° End
WC-SR-45	5	27	10.8	41.4	25.2													41.4	26.1
	6	20.7	1.8	35.1	16.2	48.6	29.7											49.5	31.5
	7			29.7	7.2	43.2	20.7	70.2	47.7									58.5	36.9
	8					37.8	11.7	64.8	38.7	91.8	65.7							66.6	40.5
	9							59.4	30.6	86.4	57.6	113	84.6					74.7	46.8
	10							54	21.6	81	48.6	108	75.6	135	103	163	131	82.8	52.2
	11									75.6	39.6	103	66.6	130	93.6	158	122	90.9	57.6
	12									70.2	31.5	97.2	58.5	124	85.5	152	113	99.9	63
WC-SR-52	5	33.3	14.4	51.3	32.4													55.8	37.8
	6	25.2	2.7	43.2	20.7	61.2	38.7											66.6	45.9
	7			35.1	9	53.1	27	89.1	63									77.4	53.1
	8					45	15.3	81	51.3	118	88.2							89.1	61.2
	9							72.9	39.6	110	76.5	146	113					99.9	68.4
	10							64.8	27.9	102	64.8	138	101	174	137	211	174	112	76.5
	11									93.6	53.1	130	89.1	166	125	203	162	122	83.7
	12									85.5	41.4	122	77.4	158	113	194	150	133	90.9
WC-SR-63	5	63	28.8	95.4	61.2													93.6	61.2
	6	50.4	9	82.8	41.4	114	72.9											113	73.8
	7			69.3	21.6	101	53.1	185	117									131	86.4
	8					88.2	33.3	152	97.2	216	161							150	98.1
	9							139	77.4	203	141	266	205					169	110.7
	10							126	57.6	190	122	254	185	318	249	382	313	188	123.3
	11									177	102	241	166	305	230	369	293	206	135
	12									164	81.9	228	146	292	210	356	274	225	147.6
WC-SR-75	5	81	44.1	127	90													131	94.5
	6	61.2	16.2	107	62.1	152	107											157	114.3
	7			87.3	35.1	132	80.1	223	171									183	133.2
	8					112	52.2	203	143	293	233							209	152.1
	9							183	116	273	206	364	297					235	171
	10							163	88.2	253	178	344	269	435	360	525	450	261	189.9
	11									233	151	324	242	415	333	505	423	287	208.8
	12									213	123	304	214	395	305	485	395	312	227.7
WC-SR-83	5	128	59.4	197	129													207	142.2
	6	97.2	33.3	167	84.6	236	154											248	171
	7			137	41.4	206	111	345	249									290	198.9
	8					176	66.6	315	205	455	345							331	227.7
	9							284	162	424	302	563	440					373	256.5
	10							255	119	394	258	533	397	671	536	810	674	414	284.4
	11									365	214	503	353	642	491	780	630	455	313.2
	12									334	171	473	310	611	448	750	587	497	342

OUTPUT TORQUE OF SPRING RETURN

OUTPUT TORQUE OF WC SERIES PNEUMATIC ACTUATOR WITH SPRING RETURN (UNIT:" LBS.)

Model	Air Pressure (PSI)																		
		30		35		40		60		70		80		100		117		Springs Output	
	Spring	0°	90°	0°	90°	0°	90°	0°	90°	0°	90°	0°	90°	0°	90°	0°	90°	0°	90°
	QTY.	Start	End	Start	End	Start	End	Start	End	Start	End	Start	End	Start	End	Start	End	Start	End
WC-SR-92	5	187	82.8	290	185													310	209.7
	6	143	18	246	121	348	223											371	252
	7			202	54.9	304	158	509	362									433	294.3
	8					260	92.7	464	297	669	501							495	335.7
	9							420	232	625	437	829	641					557	378
	10							376	167	581	371	785	575	990	780	1194	984.6	618	420.3
	11									536	306	740	510	945	716	1149	919.8	680	462.6
	12									491	241	696	446	901	651	1105	855	743	504
WC-SR-105	5	293	126	440	274													443	284.4
	6	232	32.4	380	180	528	329											532	342
	7			320	87.3	469	236	765	532									620	398.7
	8					409	142	705	438	1000	734							708	455.4
	9							645	346	941	641	1237	937					797	512.1
	10							585	252	880	547	1176	843	1472	1139	1769	1436	886	569.7
	11									820	454	1116	750	1412	1046	1708	1342	975	626.4
	12									761	361	1057	657	1353	953	1649	1249	1063	683.1
WC-SR-125	5	431	185	656	410													706	471.6
	6	332	36	557	261	791	495											847	565.2
	7			457	113	691	347	1150	806									987	659.7
	8					592	198	1051	657	1510	1116							1129	754.2
	9							952	509	1411	968	1879	1436					1270	847.8
	10							853	360	1312	819	1780	1287	2239	1746	2698	2205	1411	942.3
	11									1213	671	1681	1139	2140	1598	2599	2057	1552	1036.8
	12									1113	522	1581	990	2040	1449	2499	1908	1693	1131.3
WC-SR-140	5	762	354	1158	750													1161	772.2
	6	599	109	995	505	1391	901											1393	926.1
	7			833	261	1229	657	2021	1449									1625	1080.9
	8					1067	412	1859	1204	2651	1996							1857	1235.7
	9							1697	960	2489	1752	3272	2535					2089	1389.6
	10							1534	716	2326	1508	3109	2291	3901	3083	4693	3875	2321	1544.4
	11									2163	1264	2946	2047	3738	2839	4530	3631	2553	1698.3
	12									2001	1019	2784	1802	3576	2594	4368	3386	2786	1853.1
WC-SR-160	5	1080	429	1683	1032													1875	1257.3
	6	815	215	1418	638	2021	1241											2250	1512
	7			1154	243	1757	846	2963	2052									2628	1764
	8					1492	452	2698	1658	3895	2855							2997	2007
	9							2434	1263	3631	2460	4837	3666					3375	2259
	10							2169	868	3366	2066	4572	3272	5769	4469	6975	5675	3753	2511
	11									3101	1670	4307	2876	5504	4073	6710	5279	4122	2763
	12									2837	1275	4043	2481	5240	3678	3746	4884	4500	3015
WC-SR-190	5	1980	945	2943	1908													2637	1710
	6	1602	360	2565	1323	3537	2295											3168	2043
	7			2187	738	3159	1710	5094	3645									3690	2385
	8					2781	1125	4716	3060	6660	5004							4221	2727
	9							4338	2475	6201	4419	8217	6354					4743	3069
	10							3960	1890	5904	3834	7839	5769	9783	8245	11718	9648	5274	3411
	11									5526	3249	7461	5184	9405	7128	11340	9063	5805	3753
	12									4860	2664	7083	4599	9027	6543	10962	8478	6327	4095

OUTPUT TORQUE OF SPRING RETURN ACTUATORS

OUTPUT TORQUE OF WC SERIES PNEUMATIC ACTUATOR WITH SPRING RETURN (UNIT:" LBS.)

Model	Spring QTY	Air Pressure (PSI)																	
		30		35		40		60		70		80		100		117		Springs Output	
		0°	90°	0°	90°	0°	90°	0°	90°	0°	90°	0°	90°	0°	90°	0°	90°	0°	90°
		Start	End	Start	End	Start	End	Start	End	Start	End	Start	End	Start	End	Start	End	Start	End
WC-SR-210	5	2133	1134	3321	2322													3240	2340
	6	1611	414	2799	1802	3978	2781											3888	2817
	7			2277	891	3456	2070	5823	4437									4527	3285
	8					2934	1350	5301	3717	7677	6093							5175	3753
	9							4779	2997	7155	5373	9522	7920					5823	4221
	10							4257	2277	6633	4653	9000	7020	11367	9387	13734	11754	6471	4689
	11									6111	3933	8478	6300	10845	8667	13212	11034	7119	5157
	12									5589	3213	7956	5580	10323	7947	12690	10314	7767	5607
WC-SR-240	5	3069	1710	4806	3447													4725	3501
	6	2295	657	4032	2394	5778	4140											5670	4203
	7			3249	1350	4995	3096	8469	6570									6615	4896
	8					4221	2043	7695	5517	11178	9000							7560	5598
	9							6912	4464	10395	7947	13878	11430					8505	6300
	10							6138	3420	9621	6903	13104	10386	16578	13860	20061	17343	9450	7002
	11									8847	8550	12330	9333	15822	12807	19287	16290	10395	7695
	12									8064	4797	11547	8280	15021	11754	18504	15237	11340	8397
WC-SR-270	5	5265	3114	7911	5760													6705	4770
	6	4203	1629	6849	4275	9486	6912											8046	5724
	7			5796	2781	8433	5418	13725	10710									9387	6678
	8					7371	3933	12663	9225	17946	14508							10728	7632
	9							11601	7731	16884	13014	22167	18297					12069	8586
	10							10539	6246	15822	11529	21105	16812	26388	22095	31671	27378	13410	8540
	11									14760	10035	20043	15318	25326	20601	30609	25884	14751	10494
	12									13707	8550	18990	13833	24273	19116	29556	24399	16092	11448
WC-SR-300	5	8235	3123	9873	6561													9549	6570
	6	4977	1908	8415	4446	11844	7875											11457	7884
	7			6948	3214	10377	5751	17244	12618									13365	9198
	8					8919	4627	15786	10494	22653	17361							15273	10512
	9							14328	8370	21195	15237	28062	22104					17181	11826
	10							12870	6255	19737	13122	26604	19989	33471	26676	40338	33723	19098	13140
	11									18270	10998	25137	17865	32004	24732	39411	31599	21006	14454
	12									16812	8874	23679	15741	30546	22608	37413	29475	22914	15768
WC-SR-350	5	8838	3537	13977	8676													15318	10557
	6	6489	2160	11628	5274	16767	10413											18387	12672
	7			9288	2772	14418	7011	24705	17298									21447	14778
	8					12069	4509	23356	13896	32634	24174							24516	16893
	9							20016	10485	30294	20763	40572	31041					27576	19008
	10							17667	7083	27945	17361	38223	27639	48510	37926	58788	48204	30645	21114
	11									25596	13959	35874	24237	46161	34524	56439	44802	33705	23229
	12									23256	10548	33534	20826	43821	31113	54099	41391	36774	25344
WC-SR-400	7	10935	5040	18252	7821													25920	16533
	8			15624	3699	22950	11025											29628	18900
	9					20331	6912	34983	21564									33327	21258
	10					17703	3699	32355	17451	47007	32103							37035	23616
	11							29727	13338	44379	27990	59031	42642					40734	25983
	12							27108	9225	41760	23877	56412	38529	71055	53172	85707	67824	44442	28341
	13									39132	19755	53784	34407	68427	49050	83079	63702	48141	30708
	14									36513	15642	51165	30294	65808	44937	80460	59589	51849	33066
	15									33885	11529	48537	26181	63180	40824	77832	55476	55548	35433
	16											45909	22068	60552	36711	75204	51363	59256	37791

AIR CONSUMPTION

Actuator Weight (lbs.)									
Model	32	45	52	53	75	83	92	105	125
Weight (SR)	0.00	2.46	2.71	4.29	5.35	6.93	11.11	15.29	20.35
Weight (DA)	1.65	2.31	2.42	3.96	4.75	6.27	9.46	13.53	19.36

Actuator Weight (lbs.)									
Model	140	160	190	210	240	270	300	350	400
Weight (SR)	33.66	52.36	98.56	117.92	204.60	253.00	286.00	515.68	792.88
Weight (DA)	26.73	44.22	83.82	99.22	168.96	206.36	242.00	432.30	635.80

AIR VOLUME OPENING & CLOSING		
	Litres	
(Model)	Opening	Closing
WC-32D	0.04	0.04
WC-45D	0.08	0.11
WC-52D	0.11	0.14
WC-63D	0.2	0.23
WC-75D	0.29	0.38
WC-83D	0.41	0.55
WC-92D	0.62	0.91
WC-105D	0.94	1.18
WC-125D	1.47	1.85
WC-140D	2.43	3.2
WC-160D	3.65	5.03
WC-190D	5.9	7.9
WC-210D	7.4	9.7
WC-240D	10.7	14.3
WC-270D	16.9	22.5
WC-300D	23.8	29.7
WC-350D	35.1	46.3
WC-400D	52.6	36

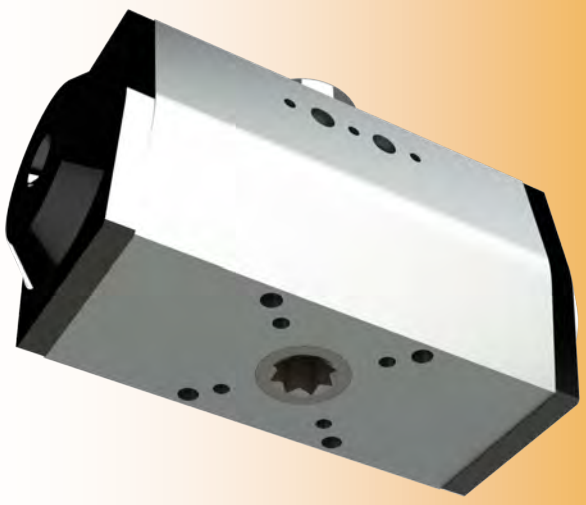

ACTUATOR DIMENSION TABLE

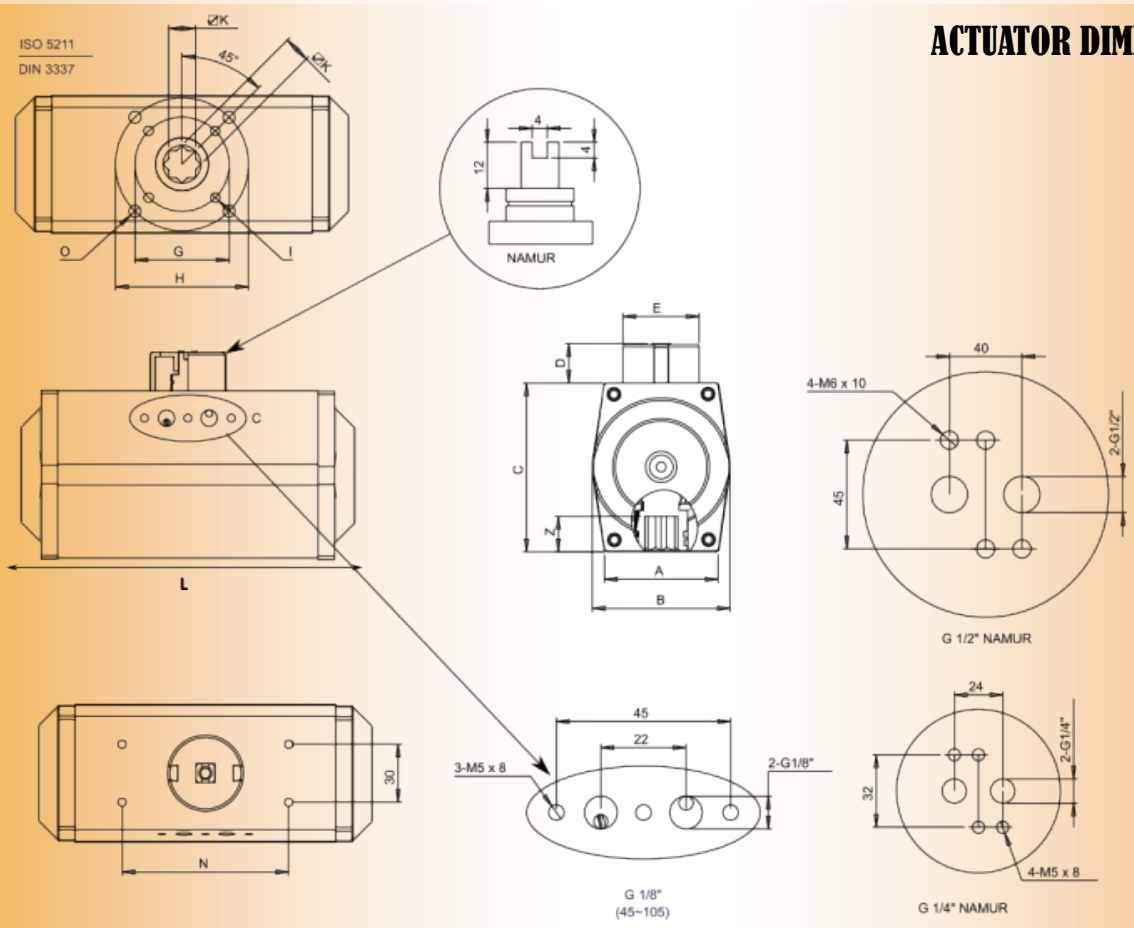

Model	A	B	C	D	E	G (dia)	H (dia)	I	K	L	N	O	Z
DA/SR-45	1.89	2.28	2.56	0.79	1.57	1.42	1.97	M5x8	0.43	5.91	3.15	M6x10	0.55
DA/SR-52	1.97	2.32	2.91	0.79	1.57	1.42	1.97	M5x8	0.43	5.91	3.15	M6x10	0.55
DA/SR-63	2.36	2.83	3.46	0.79	1.57	1.97	2.76	M6x10	0.55	6.50	3.15	M8x13	0.71
DA/SR-75	2.56	3.27	3.94	0.79	1.57	1.97	2.76	M6x10	0.55	7.36	3.15	M8x13	0.71
DA/SR-83	2.64	3.58	4.33	0.79	1.57	1.97	2.76	M6x10	0.67	8.43	3.15	M8x13	0.83
DA/SR-92	2.99	4.09	4.72	0.79	1.57	1.97	2.76	M6x10	0.67	10.47	3.15	M8x13	0.83
DA/SR-105	3.31	4.49	5.22	0.79	1.57	2.76	4.02	M8x13	0.87	10.87	3.15	M10x16	1.02
DA/SR-125	4.06	5.39	6.30	1.18	2.20	2.76	4.02	M8x13	0.87	12.05	5.12	M10x16	1.02
DA/SR-140	4.21	5.98	6.75	1.18	2.20	4.02	4.92	M10x16	1.06	15.75	5.12	M12x20	1.22
DA/SR-160	5.04	6.85	7.76	1.18	2.20	4.02	4.92	M10x16	1.06	18.11	5.12	M12x20	1.22
DA/SR-190	5.31	8.11	9.06	1.18	3.15	0.00	5.51	-	1.42	20.87	5.12	M16x25	1.57
DA/SR-210	5.31	8.9	10.04	1.18	3.15	0.00	5.51	-	1.42	21.06	5.12	M16x25	1.57
DA/SR-240	6.10	10.08	11.42	1.18	3.15	0.00	6.50	-	1.81	23.70	5.12	M20x25	1.97
DA/SR-270	7.47	11.57	12.60	1.18	3.15	0.00	6.50	-	1.81	28.43	5.12	M20x25	1.97
DA/SR-300	7.72	12.76	13.7	1.18	3.15	0.00	6.50	-	1.81	29.21	5.12	M20x25	2.36
DA/SR-350	8.66	14.96	15.83	1.18	3.15	0.00	6.50	-	1.81	34.65	5.12	M20x25	2.36
DA/SR-400	11.73	20.23	18.26	1.18	2.83	6.50	10	M20x4	1.81	36.38	5.12	M16x8	2.36

SPECIAL STROKES WC ACTUATOR PROFILE

Top mounting pad conforms to standard VDI/VDE3845 NAMUR, convenient to install limit switch.

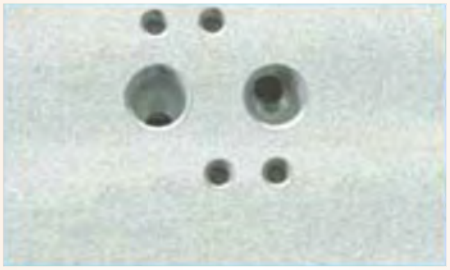

Access of mounting pad conforms to standard VDI/VDE 3845 NAMUR, fit for installing solenoid valve.

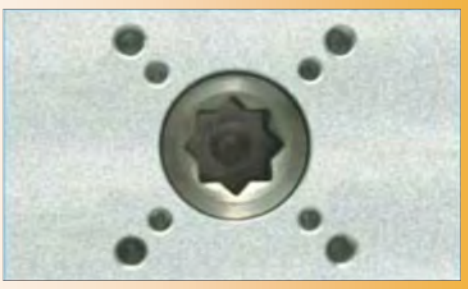

Bottom mounting pad conforms to standards ISO5211 and DIN3337 and connect directly with valve. Star and rectangular holes are convenient to connect directly with valves.

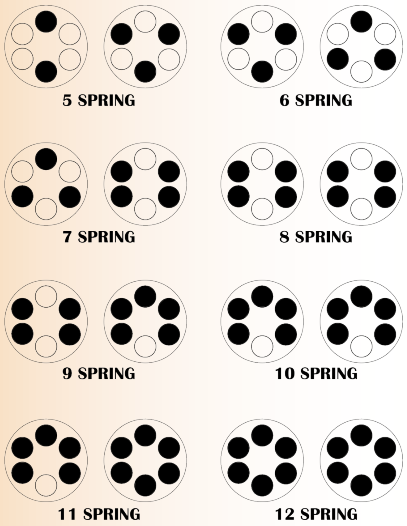

WC Rack Part # Matrix

WC 300 SR 12

Size | Type | Spring Set

SIZE	
45	Size 45
52	Size 52
63	Size 63
75	Size 75
83	Size 83
92	Size 92
105	Size 105
125	Size 125
140	Size 140
160	Size 160
190	Size 190
210	Size 210
240	Size 240
270	Size 270
300	Size 300
350	Size 350
400	Size 400

Spring Set	
5	Spring Set 5
6	Spring Set 6
7	Spring Set 7
8	Spring Set 8
9	Spring Set 9
10	Spring Set 10
11	Spring Set 11
12	Spring Set 12
13	Spring Set 13
14	Spring Set 14
15	Spring Set 15
16	Spring Set 16

TYPE	
SR	Spring Return
DA	Double Acting

PRODUCT GUIDE

WEIR CONCEPTS WC-RACK AND PINION ACTUATORS

Technical Library

www.weirconcepts.com

SCAN ME

SOLUTIONS FOR YOUR COMPANY NEEDS

HEAD OFFICE:

7596 Wagner RD NW
Edmonton, Alberta CANADA T6E 5B2
info@weirconcepts.com
1.866.462.1910 Toll Free
780.462.1910 ph | 780.462.1959 fax

HELP DESK EXPERTISE

FOR YOUR SUPPORT AND SERVICE

24 hours a day, 7 days a week

NO CHARGE ON CALLS SERVICE

We offer technical assistance, product knowledge, and reliable trouble shooting

Brochures/Maintenance info available online VIA our Technical Library

Weir Concepts Inc.